Cambridge International AS & A Level

Cambridge International Examinations
Cambridge International Advanced Subsidiary and Advanced Level

PHYSICS **9702/12**

Paper 1 Multiple Choice **February/March 2017**

1 hour 15 minutes

Additional Materials: Multiple Choice Answer Sheet
Soft clean eraser
Soft pencil (type B or HB is recommended)

0090693737

READ THESE INSTRUCTIONS FIRST

Write in soft pencil.
Do not use staples, paper clips, glue or correction fluid.
Write your name, Centre number and candidate number on the Answer Sheet in the spaces provided unless this has been done for you.
DO **NOT** WRITE IN ANY BARCODES.

There are **forty** questions on this paper. Answer **all** questions. For each question there are four possible answers **A**, **B**, **C** and **D**.
Choose the **one** you consider correct and record your choice in **soft pencil** on the separate Answer Sheet.

Read the instructions on the Answer Sheet very carefully.

Each correct answer will score one mark. A mark will not be deducted for a wrong answer.
Any working should be done in this booklet.
Electronic calculators may be used.

This document consists of **18** printed pages and **2** blank pages.

© UCLES 2017

Data

speed of light in free space	$c = 3.00 \times 10^{8}\,\text{m s}^{-1}$
permeability of free space	$\mu_0 = 4\pi \times 10^{-7}\,\text{H m}^{-1}$
permittivity of free space	$\varepsilon_0 = 8.85 \times 10^{-12}\,\text{F m}^{-1}$
	$\left(\frac{1}{4\pi\varepsilon_0} = 8.99 \times 10^{9}\,\text{m F}^{-1}\right)$
elementary charge	$e = 1.60 \times 10^{-19}\,\text{C}$
the Planck constant	$h = 6.63 \times 10^{-34}\,\text{J s}$
unified atomic mass unit	$1\,\text{u} = 1.66 \times 10^{-27}\,\text{kg}$
rest mass of electron	$m_\text{e} = 9.11 \times 10^{-31}\,\text{kg}$
rest mass of proton	$m_\text{p} = 1.67 \times 10^{-27}\,\text{kg}$
molar gas constant	$R = 8.31\,\text{J K}^{-1}\,\text{mol}^{-1}$
the Avogadro constant	$N_\text{A} = 6.02 \times 10^{23}\,\text{mol}^{-1}$
the Boltzmann constant	$k = 1.38 \times 10^{-23}\,\text{J K}^{-1}$
gravitational constant	$G = 6.67 \times 10^{-11}\,\text{N m}^2\,\text{kg}^{-2}$
acceleration of free fall	$g = 9.81\,\text{m s}^{-2}$

© UCLES 2017

Formulae

uniformly accelerated motion	$s = ut + \frac{1}{2}at^2$ $v^2 = u^2 + 2as$
work done on/by a gas	$W = p\Delta V$
gravitational potential	$\phi = -\frac{Gm}{r}$
hydrostatic pressure	$p = \rho gh$
pressure of an ideal gas	$p = \frac{1}{3}\frac{Nm}{V}\langle c^2 \rangle$
simple harmonic motion	$a = -\omega^2 x$
velocity of particle in s.h.m.	$v = v_0 \cos \omega t$ $v = \pm\omega\sqrt{(x_0^2 - x^2)}$
Doppler effect	$f_o = \frac{f_s v}{v \pm v_s}$
electric potential	$V = \frac{Q}{4\pi\varepsilon_0 r}$
capacitors in series	$1/C = 1/C_1 + 1/C_2 + \ldots$
capacitors in parallel	$C = C_1 + C_2 + \ldots$
energy of charged capacitor	$W = \frac{1}{2}QV$
electric current	$I = Anvq$
resistors in series	$R = R_1 + R_2 + \ldots$
resistors in parallel	$1/R = 1/R_1 + 1/R_2 + \ldots$
Hall voltage	$V_H = \frac{BI}{ntq}$
alternating current/voltage	$x = x_0 \sin \omega t$
radioactive decay	$x = x_0 \exp(-\lambda t)$
decay constant	$\lambda = \frac{0.693}{t_{\frac{1}{2}}}$

© UCLES 2017

[Turn over

1 Which expression has the same SI base units as pressure?

A $\dfrac{\text{force}}{\text{length} \times \text{speed}}$

B $\dfrac{\text{force}}{\text{length} \times \text{time}}$

C $\dfrac{\text{mass}}{\text{length} \times (\text{time})^2}$

D $\dfrac{\text{mass} \times (\text{time})^2}{\text{length}}$

2 What is an approximate value for the speed of sound in air?

A $30\,\text{m}\,\text{s}^{-1}$ **B** $300\,\text{m}\,\text{s}^{-1}$ **C** $30\,000\,\text{m}\,\text{s}^{-1}$ **D** $300\,000\,000\,\text{m}\,\text{s}^{-1}$

3 A pendulum bob is held stationary by a horizontal force *H*. The three forces acting on the bob are shown in the diagram.

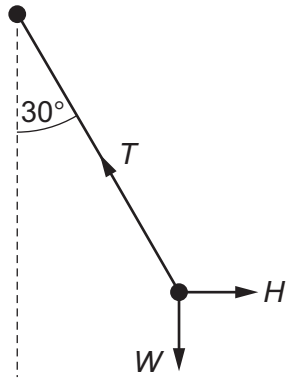

The tension in the string of the pendulum is *T*. The weight of the pendulum bob is *W*. The string is held at an angle of 30° to the vertical.

Which statement is correct?

A $H = T\cos 30$

B $T = H\sin 30$

C $W = T\sin 30$

D $W = T\cos 30$

© UCLES 2017

4 A student is investigating an electrical signal using a cathode-ray oscilloscope (c.r.o).

The frequency of the signal is 50 kHz.

Which time-base setting on the oscilloscope should be used?

A $50\,\text{ms}\,\text{cm}^{-1}$ **B** $1\,\text{ms}\,\text{cm}^{-1}$ **C** $10\,\mu\text{s}\,\text{cm}^{-1}$ **D** $0.5\,\mu\text{s}\,\text{cm}^{-1}$

5 A student wishes to measure a distance of about 10 cm to a precision of 0.01 cm.

Which measuring instrument should be used?

A metre rule

B micrometer

C tape measure

D vernier calipers

6 An aircraft, initially stationary on a runway, takes off with a speed of $85\,\text{km}\,\text{h}^{-1}$ in a distance of no more than 1.20 km.

What is the minimum constant acceleration necessary for the aircraft?

A $0.23\,\text{m}\,\text{s}^{-2}$ **B** $0.46\,\text{m}\,\text{s}^{-2}$ **C** $3.0\,\text{m}\,\text{s}^{-2}$ **D** $6.0\,\text{m}\,\text{s}^{-2}$

7 A radio-controlled toy car travels along a straight line for a time of 15 s.

The variation with time t of the velocity v of the car is shown.

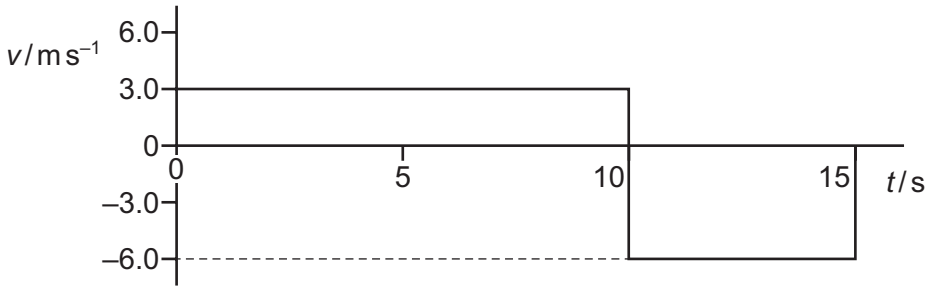

What is the average velocity of the toy car for the journey shown by the graph?

A $-1.5\,\text{m}\,\text{s}^{-1}$ **B** $0.0\,\text{m}\,\text{s}^{-1}$ **C** $4.0\,\text{m}\,\text{s}^{-1}$ **D** $4.5\,\text{m}\,\text{s}^{-1}$

8 The acceleration of free fall on Pluto is $0.66\,\text{m}\,\text{s}^{-2}$.

An object weighs 6.0 N on Earth.

What would this object weigh on Pluto?

A 0.40 N **B** 0.93 N **C** 4.0 N **D** 39 N

© UCLES 2017

9 Water flows out of a pipe and hits a wall.

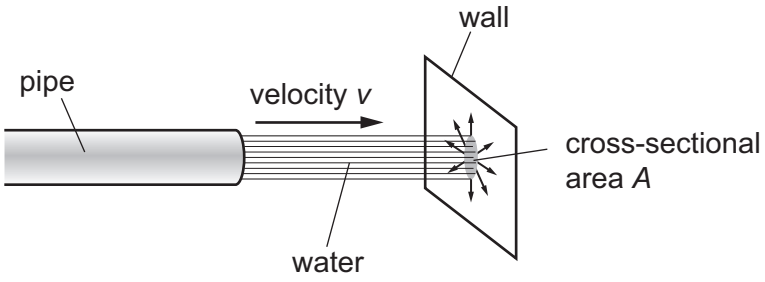

When the jet of water hits the wall, it has horizontal velocity v and cross-sectional area A.

The density of the water is ρ. The water does not rebound from the wall.

What is the force exerted on the wall by the water?

A $\frac{\rho v}{A}$ **B** $\frac{\rho v^2}{A}$ **C** $\rho A v$ **D** $\rho A v^2$

10 A stationary firework explodes into three pieces. The masses and the velocities of the three pieces immediately after the explosion are shown.

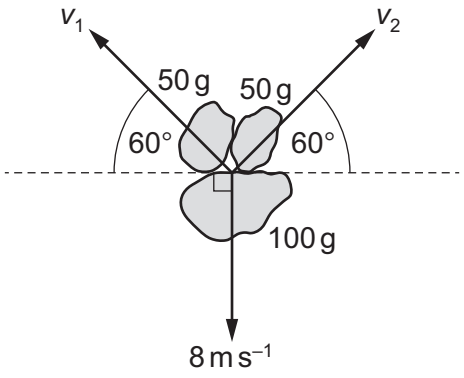

What are speed v_1 and speed v_2?

	v_1 / m s^{-1}	v_2 / m s^{-1}
A	4.0	4.0
B	9.2	9.2
C	14	14
D	16	16

© UCLES 2017

11 A spherical object falls through water at constant speed. Three forces act on the object.

Which diagram, showing these three forces to scale, is correct?

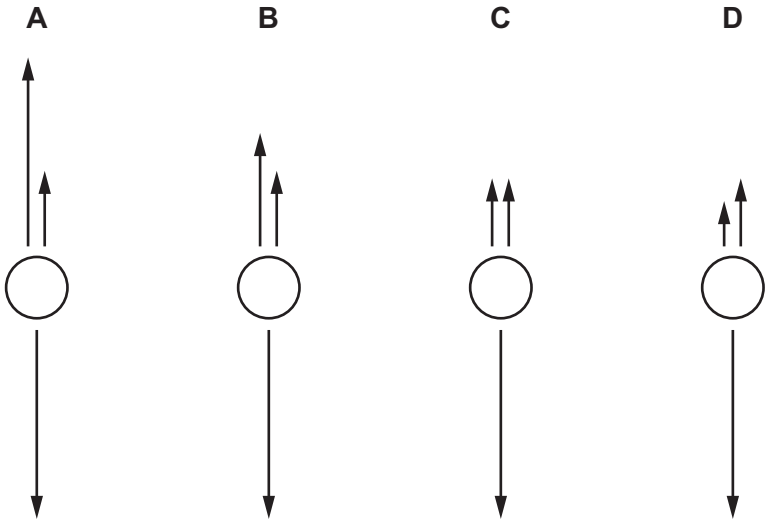

12 A uniform metre rule of weight 2.0 N is pivoted at the 60 cm mark. A 4.0 N load is suspended from one end, causing the rule to rotate about the pivot.

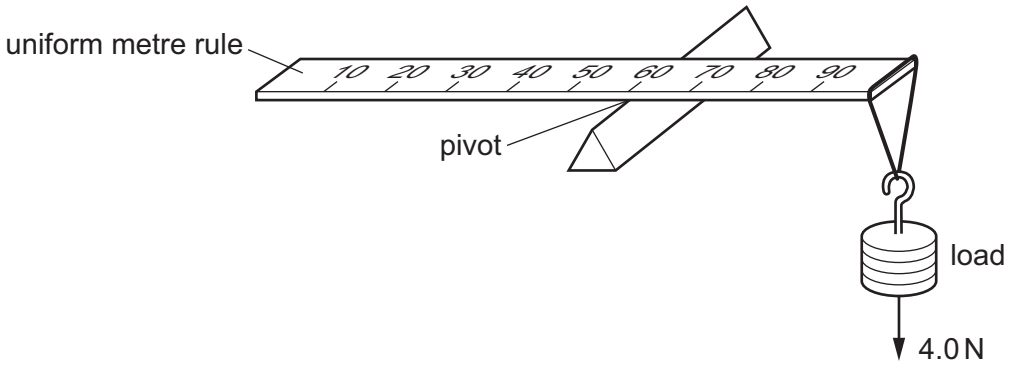

At the instant when the rule is horizontal, what is the resultant moment about the pivot?

A 0.0 N m **B** 1.4 N m **C** 1.6 N m **D** 1.8 N m

13 The vertical forces that the ground exerts on a stationary van are shown.

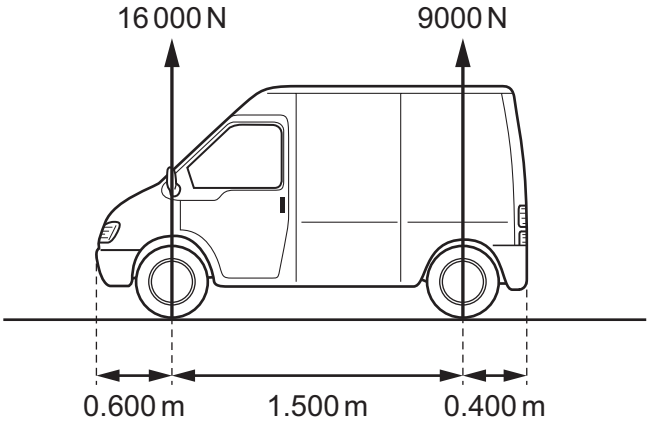

The van is 2.50 m long with the wheels at a distance of 0.600 m from the front of the van and 0.400 m from the rear of the van.

What is the horizontal distance of the van's centre of gravity from the front of the van?

A 0.540 m **B** 0.960 m **C** 1.14 m **D** 1.36 m

14 An object hangs by means of two cords around two rods, as shown.

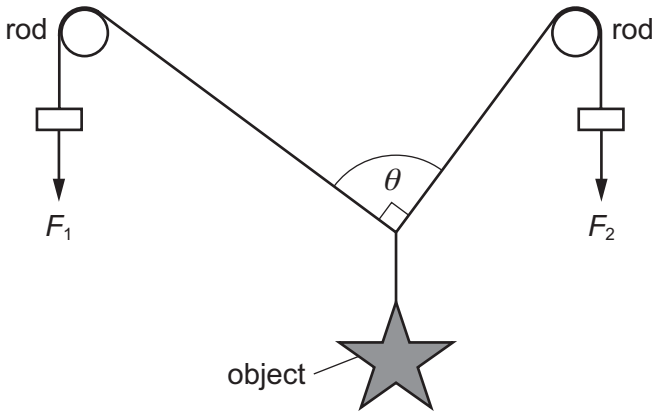

The object is held in equilibrium by the forces F_1 and F_2. The object weighs 10 N. There is negligible friction between the rods and cords. Angle θ is 90°.

Which row of the table gives an angle θ of 90°?

	F_1 / N	F_2 / N
A	4.0	6.0
B	6.0	4.0
C	6.0	8.0
D	8.0	6.0

© UCLES 2017

15 Which force is caused only by a pressure difference?

A friction

B upthrust

C viscous force

D weight

16 The total energy input E_{in} in a process is partly transferred to useful energy output U and partly transfered to energy that is wasted W.

What is the efficiency of the process?

A $\frac{U}{E_{in}} \times 100\%$

B $\frac{W}{E_{in}} \times 100\%$

C $\frac{U}{W} \times 100\%$

D $\frac{U+W}{E_{in}} \times 100\%$

17 A gas is enclosed inside a cylinder which is fitted with a frictionless piston.

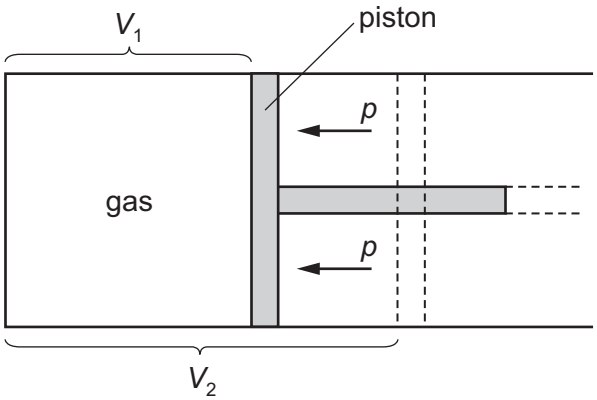

Initially, the gas has a volume V_1 and is in equilibrium with the external pressure p. The gas is then heated slowly so that it expands at constant pressure, pushing the piston back until the volume of the gas has increased to V_2.

How much work is done by the gas during this expansion?

A $p(V_2 - V_1)$ **B** $\frac{1}{2}p(V_2 - V_1)$ **C** $p(V_2 + V_1)$ **D** $\frac{1}{2}p(V_2 + V_1)$

© UCLES 2017

18 A projectile is thrown at an angle to the ground.

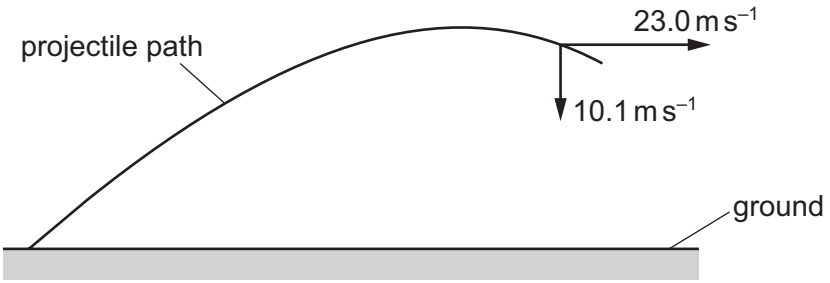

At a certain time, the projectile has a horizontal velocity of $23.0\,m\,s^{-1}$ and a vertical velocity of $-10.1\,m\,s^{-1}$.

What is the speed of the projectile at this time?

A $12.9\,m\,s^{-1}$ **B** $20.7\,m\,s^{-1}$ **C** $25.1\,m\,s^{-1}$ **D** $33.1\,m\,s^{-1}$

19 A car of mass 1400 kg is travelling on a straight, horizontal road at a constant speed of $25\,m\,s^{-1}$. The output power from the car's engine is 30 kW.

The car then travels up a slope at 2° to the horizontal, maintaining the same constant speed.

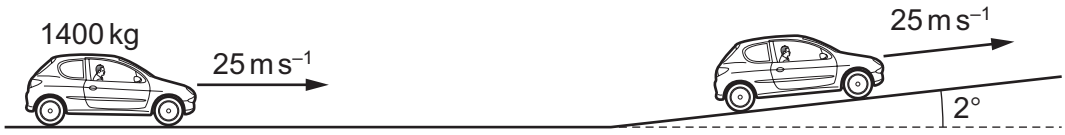

What is the output power of the car's engine when travelling up the slope?

A 12 kW **B** 31 kW **C** 42 kW **D** 65 kW

20 Two wires X and Y are made of different metals. The Young modulus of wire X is twice that of wire Y. The diameter of wire X is half that of wire Y.

The wires are extended with the same strain and obey Hooke's law.

What is the ratio $\frac{\text{tension in wire X}}{\text{tension in wire Y}}$?

A $\frac{1}{8}$ **B** $\frac{1}{2}$ **C** 1 **D** 8

21 A weight of 120 kN is placed on top of a metal column. The length of the column is compressed by 0.25 mm. The column obeys Hooke's law when compressed.

How much energy is stored in the compressed column?

A 15 J **B** 30 J **C** 15 kJ **D** 30 kJ

© UCLES 2017

22 What is the relationship between the amplitude of a wave and its intensity?

A amplitude $\propto$ intensity

B amplitude $\propto$ (intensity)^2

C amplitude $\propto \sqrt{\text{intensity}}$

D (amplitude)$^2 \propto \sqrt{\text{intensity}}$

23 Which statement about light waves and sound waves is correct?

A Both light waves and sound waves show the Doppler effect.

B Light waves can be diffracted but sound waves cannot be diffracted.

C Sound waves are transverse waves and light waves are longitudinal waves.

D Sound waves can travel in a vacuum but light waves cannot travel in a vacuum.

24 The diagram shows two waves R and S.

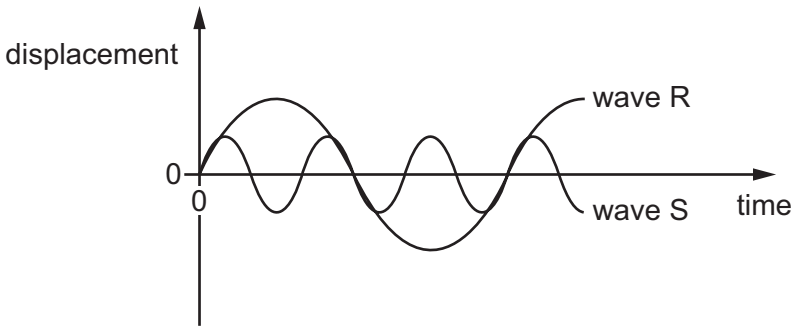

Wave R has an amplitude of 8 cm and a period of 30 ms.

What are the amplitude and the period of wave S?

	amplitude / cm	period / ms
A	2	10
B	2	90
C	4	10
D	4	90

25 A source of sound waves is travelling as shown.

In which situation would the stationary observer detect the largest decrease in the observed frequency?

A



B



C

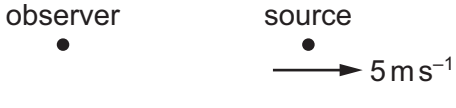

D

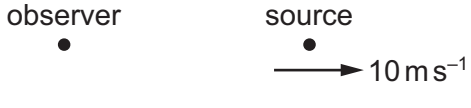

26 M and N are two electromagnetic waves.

The ratio

$$\frac{\text{wavelength of M}}{\text{wavelength of N}} = 10^5.$$

What could M and N be?

	M	N
A	microwaves	visible light
B	microwaves	γ-rays
C	γ-rays	microwaves
D	visible light	microwaves

27 A progressive wave is incident normally on a flat reflector. The reflected wave overlaps with the incident wave and a stationary wave is formed.

At an antinode, what could be the ratio $\frac{\text{displacement of the incident wave}}{\text{displacement of the reflected wave}}$ at any instant?

A –1 **B** 0 **C** 1 **D** 2

© UCLES 2017

28 A monochromatic plane wave of speed c and wavelength λ is diffracted at a small aperture.

The diagram illustrates successive wavefronts.

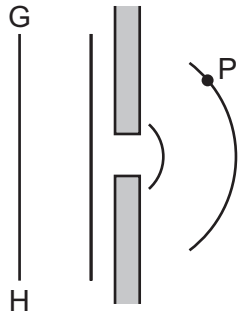

After what time will some portion of the wavefront GH reach point P?

A $\frac{3\lambda}{2c}$ **B** $\frac{2\lambda}{c}$ **C** $\frac{3\lambda}{c}$ **D** $\frac{4\lambda}{c}$

29 In an experiment to demonstrate two-source interference of light, a beam of light is split into two beams using two slits 0.50 mm apart. These two beams are incident on a laboratory wall at a distance of 4.0 m.

The wavelength of light is 550 nm.

How far apart are two adjacent interference fringes that are formed on the laboratory wall?

A 0.22 mm **B** 0.44 mm **C** 2.2 mm **D** 4.4 mm

© UCLES 2017

30 Two positive charges and one negative charge, all of equal magnitude, are set at the corners of an equilateral triangle.

Which diagram best represents the electric field surrounding the charges?

A

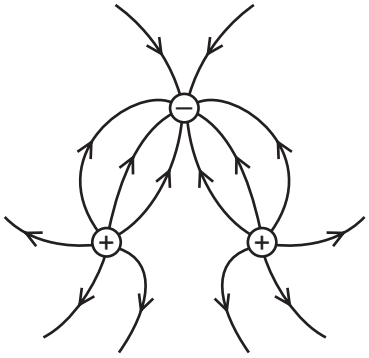

B

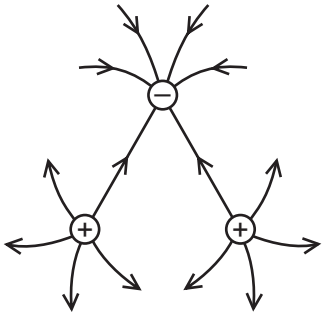

C

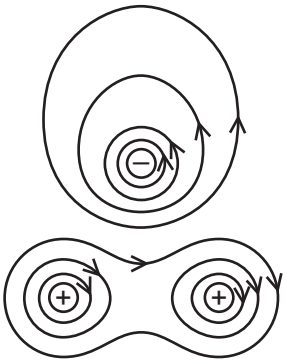

D

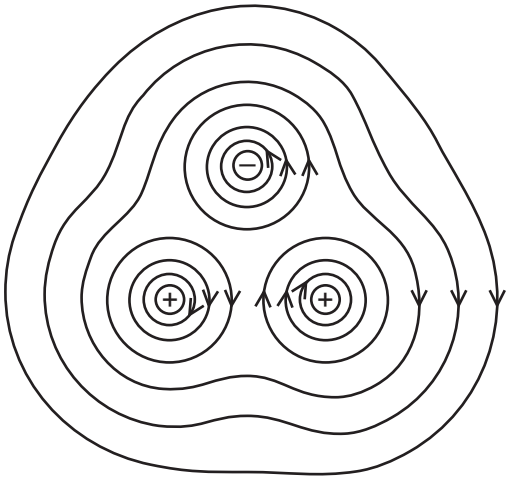

31 A constant potential difference is applied between two horizontal metal plates. A charged oil droplet is held stationary by the electric field between the plates.

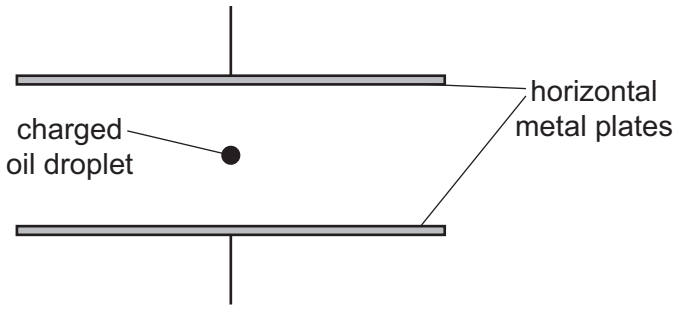

As some of the oil evaporates, the droplet loses mass and starts to accelerate. Its charge remains constant.

In which direction does the droplet accelerate, and which change needs to be made to the separation of the plates in order to stop this acceleration?

	direction of acceleration	separation of the plates
A	downwards	decrease
B	downwards	increase
C	upwards	decrease
D	upwards	increase

32 An electric current I is given in the list of formulae on page 3 as $I = Anvq$.

What do each of the symbols represent for an electric current in a metal wire?

	A	*n*	*v*	*q*
A	area of cross-section	number of free electrons	voltage	charge of each molecule
B	area of cross-section	number of free electrons per unit volume	average drift speed of electrons	charge of each electron
C	current	number of free electrons	average drift speed of electrons	charge of each molecule
D	current	number of free electrons per unit volume	voltage	charge of each electron

© UCLES 2017

33 The potential difference across a resistor is 12 V. The current in the resistor is 2.0 A.

A charge of 4.0 C passes through the resistor.

What is the energy transferred in the resistor and the time taken for the charge to pass through the resistor?

	energy / J	time / s
A	3.0	2.0
B	3.0	8.0
C	48	2.0
D	48	8.0

34 A coil contains N turns of insulated copper wire wound on to a cylindrical iron core of diameter D. The copper wire has a diameter d. The resistivity of copper is ρ. Diameter D is much greater than diameter d.

What is the total resistance between the two ends of the coil?

A $\frac{4N\rho D}{d^2}$ **B** $\frac{4N\rho d}{D^2}$ **C** $\frac{8N\rho D}{d^2}$ **D** $\frac{8N\rho d}{D^2}$

35 Two cells are connected to a load resistor of resistance 3.0 Ω. The electromotive force (e.m.f). and the internal resistance of each of the cells is shown.

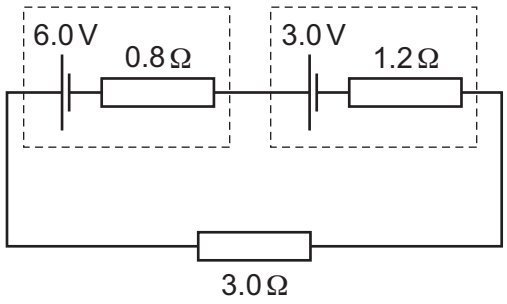

What is the current in the load resistor?

A 0.60 A **B** 1.2 A **C** 1.8 A **D** 3.0 A

© UCLES 2017

36 Six resistors, each of resistance R, are connected as shown.

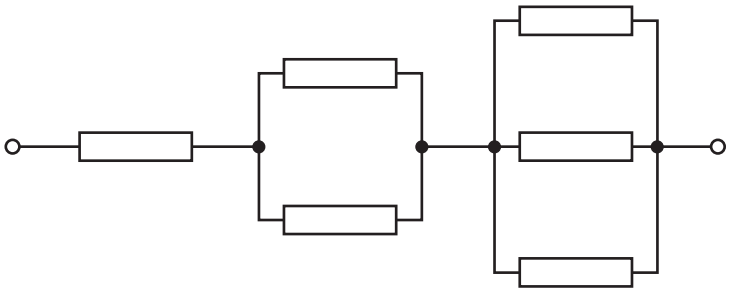

The combined resistance is 66 kΩ.

What is the value of R?

A 11 kΩ **B** 18 kΩ **C** 22 kΩ **D** 36 kΩ

37 A potential divider consists of two resistors of resistances R_1 and R_2 connected in series across a source of potential difference (p.d.) V_{in}. The p.d. across R_1 is V_{out}.

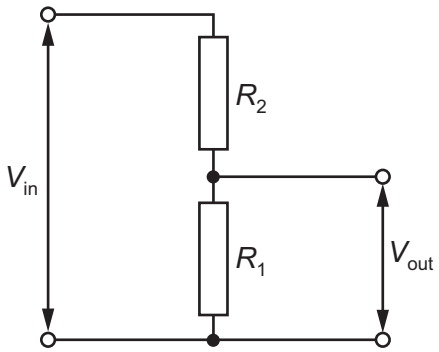

Which changes to R_1 and to R_2 will increase the value of V_{out}?

	R_1	R_2
A	doubled	doubled
B	doubled	halved
C	halved	doubled
D	halved	halved

© UCLES 2017

38 Which row describes the relative ionizing power and the relative penetration power per unit length in air of α-particles and γ-rays?

	α-particles	γ-rays
A	least ionizing	least penetrating
B	least penetrating	most ionizing
C	most ionizing	most penetrating
D	most penetrating	least ionizing

39 A nucleus of sodium-21, $^{21}_{11}\text{Na}$, decays to form a new nucleus containing 10 protons and 11 neutrons.

Which leptons are emitted from the sodium-21 nucleus during the decay?

A a positron and an antineutrino

B a positron and a neutrino

C an electron and an antineutrino

D an electron and a neutrino

40 A neutron decays to form a proton.

Which particle is **not** involved in the decay process?

A antineutrino

B down quark

C positron

D up quark

© UCLES 2017

BLANK PAGE

BLANK PAGE

Permission to reproduce items where third-party owned material protected by copyright is included has been sought and cleared where possible. Every reasonable effort has been made by the publisher (UCLES) to trace copyright holders, but if any items requiring clearance have unwittingly been included, the publisher will be pleased to make amends at the earliest possible opportunity.

To avoid the issue of disclosure of answer-related information to candidates, all copyright acknowledgements are reproduced online in the Cambridge International Examinations Copyright Acknowledgements Booklet. This is produced for each series of examinations and is freely available to download at www.cie.org.uk after the live examination series.

Cambridge International Examinations is part of the Cambridge Assessment Group. Cambridge Assessment is the brand name of University of Cambridge Local Examinations Syndicate (UCLES), which is itself a department of the University of Cambridge.